Manta Unpainted Barrier

Specification Sheet

MTS190030

28/07/26

safesite® FACILITIES

Manta Unpainted Barrier

This version of the Manta barrier offers the same durable, long-lasting design as the original, but without the powder-coated finish.

Made from recyclable galvanised steel, it is built to withstand tough conditions and is suitable for repeated repositioning and reuse throughout the life of your project.

Available in the standard galvanised unpainted options, this model also offers a high-visibility red and white striped option. Each unit securely connects to the next using a removable steel pin, allowing you to create a continuous and adaptable barrier system tailored to your site requirements.

Hi-Vis Option

Connection Pin

Description	Size (mm)	Weight (kg)
MTS190030 - Manta Unpainted Barrier - Standard	H420 x W1500 x D500	48
MTS190020 - Manta Unpainted Barrier - Hi-Vis	H420x W1500 x D500	48

Key Features

- Crash tested to TB22 W7 levels, without the need for re-enforcement bars
- Wind tunnel classification of Class A/74mph
- Can be used with mesh fence and steel hoarding panels
- Stackable for easy transportation
- Anti-vandal design
- Accommodates 90° bends
- Option with Hi-Vis Striped version

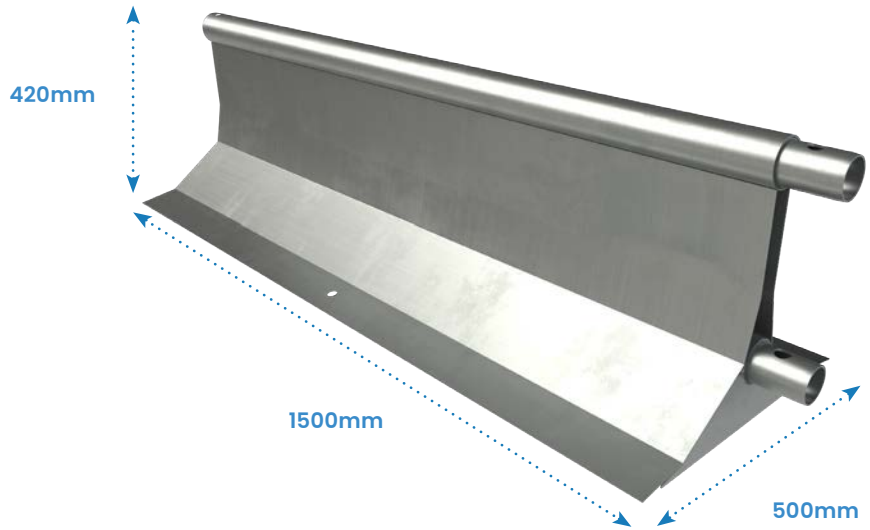

Manta Unpainted Barrier - Options

Manta Barrier
(Unpainted with High-Vis)

Manta Barrier
Unpainted Only

Important Information!

Manta Barriers Don't Need Connection Bars

The Manta Barrier still maintains its tested safety standards when also supporting either a 1.5m pedestrian fence or 3m temporary fence, this is due to the Manta Barriers innovative design and installation method which eliminates the need for a connection bar.

This marketing leading system not only saves time during installation, but also saves space when in transit. Regardless of whether your installation is standalone or requiring of a fence add-on, no connection bar will ever be required.

This approach to the system aids the streamlining of installation through both speed, and easy handling of the lightweight connection pin plate used to join the barriers.

Key Features

- No connection bar is ever required
- Maximises Installation times
- Connection is achieved by pin plate when using a standalone barrier
- Manta Barriers can also connect using the legs of the fencing add-ons to act as connection pins without reducing safety
- Connection Pin Plate is a lightweight, easy to handle size
- Crash tested to TB22 W7 levels, inclusive of fence add-ons

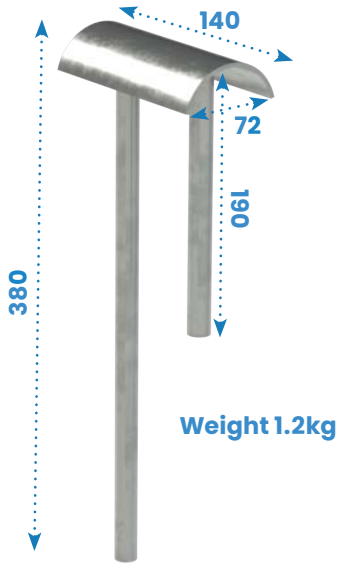

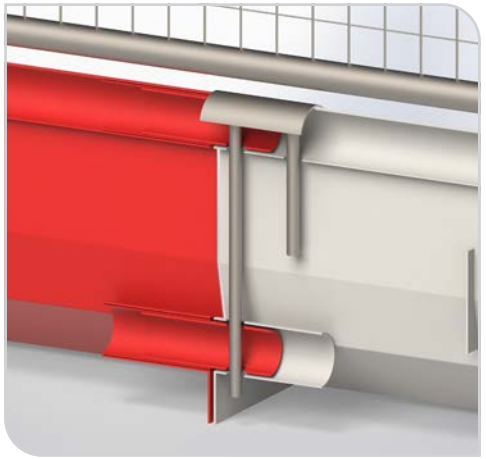

Manta Barriers connected using Pin Plate

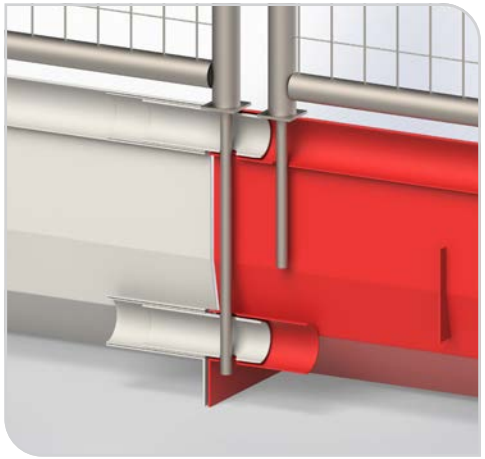

Manta Barriers connected using fence add-on bar extensions

Manta Barrier Crash Tested

The ASI achieved by the Manta Barrier is 0.2 and THIV 13, this results in an A rating for severity which is the lowest and best result achievable.

This is a report summary of the crash test conducted by Horiba Mira Ltd, describing the dynamic impact test of the Manta Barrier System to W7 of BS EN 1317:2010. The impact conditions of this test were met with total test mass of 1300 (±65) kg at a speed of 82 (-0 + 7%) km/h (50.9mph), at an angle of 15.7° (+1.5, -1) degrees to the line of the barrier traffic face and therefore satisfactory. The vehicle model used to undertake the test was a Ford Focus.

The correct installation of the test item was the responsibility of the client. The length of the barrier tested was 60m (including anchor terminals), the dynamic deflection was 1.7m and the working width was 2.2m. No part of the barrier penetrated the interior of the vehicle and no part of the barrier was ejected.

Crash Test Summary

- Best possible result for ASI & THIV assessment, achieving an A rating
- Passed TB22 W7 of BS EN 1317:2010 impact test
- Withstood 1300kg impact at 50.9mph from a 15.7° angle
- No reinforcement bar used or required
- Velocity and angle values were within tolerance limits
- The vehicle did not breach the device
- The vehicle did not roll over within the test area
- No part of the vehicle was detached

Initial point of impact

Degree of deflection at point of highest force

Manta Barrier Wind Tested

The Manta Barrier has been meticulously tested within an internationally renowned wind tunnel testing facility, during which the barrier system achieved two classification A passes and one classification B pass.

Three arrangements of the Manta barrier system have been tested, these include two adjoined Manta barriers without any add-ons, two adjoined Manta barriers with the lightweight pedestrian fence add-on, and two adjoined Manta barriers with the anti-climb mesh fence add-on. Each arrangement of the system achieved a high level of wind resistance, with the exact resistance figures detailed above the diagrams to the right.

74 mph

Classification: A

Speed Limit Reached: 1

20km/h (33.3m/s)

60 mph

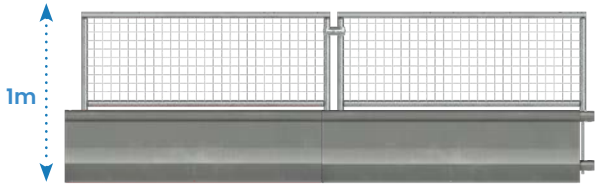

Classification: A

Speed Limit Reached:

97km/h (26.9m/s)

44 mph

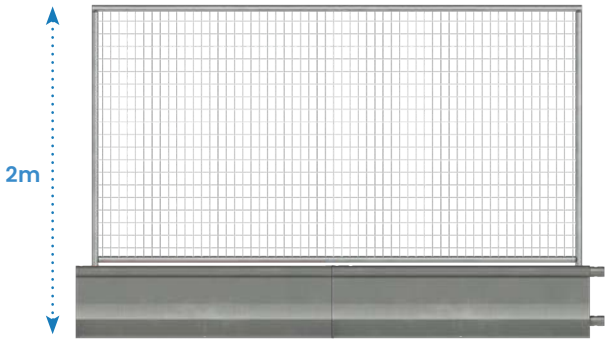

Classification: B

Speed Limit Reached:

72km/h (20.0m/s)

Manta Unpainted Barrier 1.5m Pedestrian Rail

The Manta Barrier pedestrian rail fence is very lightweight, weighing only 5kg. Despite its light weight, the pedestrian fence extension increases the overall height of the barrier system to a substantial 1m.

This quick and easy to install extension provides the additional security often needed to protect vehicle drivers, workforce and pedestrians.

By using the pedestrian fence extension you have the reassurance of knowing the extra height achieved will reduce the risk of a passer-by perimeter breach.

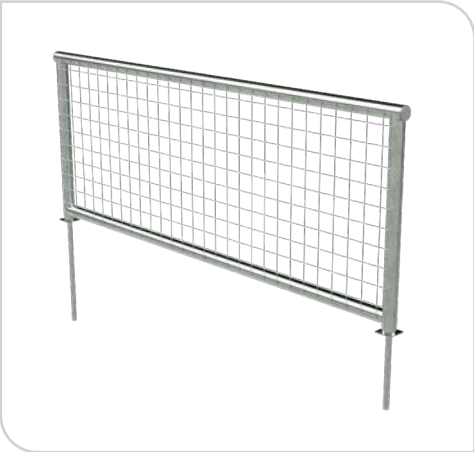

Made from galvanised steel

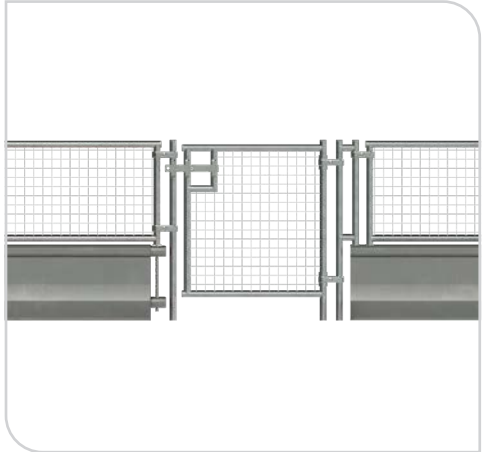

In-Line Manta Pedestrian Gate

Key Features

- Increases overall height to 1m
- Legs double up as connection pins
- Anti-climb mesh
- Quick and easy to install
- Provides protection to workforce and pedestrians
- Manufactured using galvanised steel
- Reduces the risk of the barrier perimeter being breached

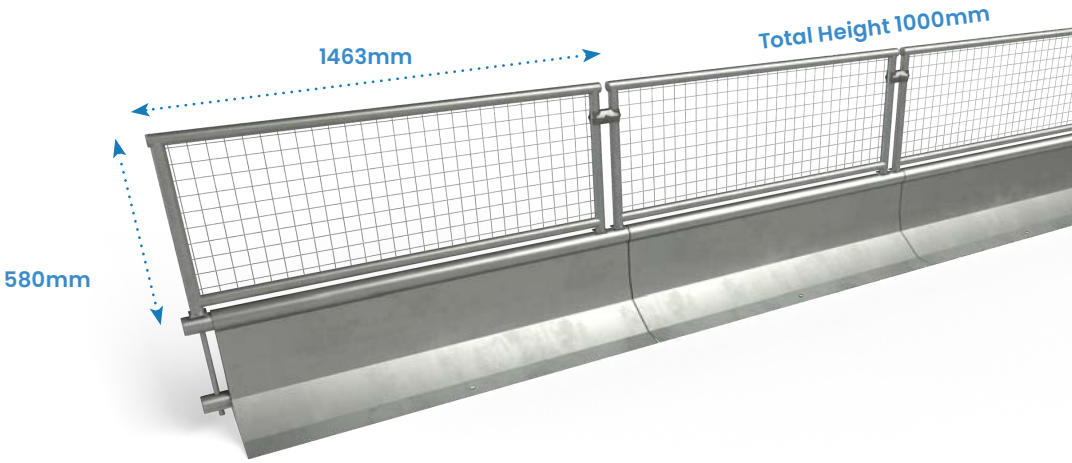

1.5m Pedestrian Rail Specification

Description	**Size** (mm)	**Weight** (kg)
MTS200450 - 1.5m Pedestrian Rail	H580 x W1463 x D38	6

Manta Unpainted Barrier 1.5m Chapter 8 Pedestrian Rail

This enhanced version of the 1.5m pedestrian fence has high visibility and highly reflective red and white markings.

The additional high visibility makings ensure compliance to Chapter 8 requirements, the system is also compliant to road traffic standards BSEN8442 & BSEN12899-1.

Our Manta Barrier Chapter 8 System is strong enough to remain stable in adverse weather conditions due to the substantial 42kg Manta Barrier base unit, this is significant when you consider many Chapter 8 barriers weigh less than 15kg.

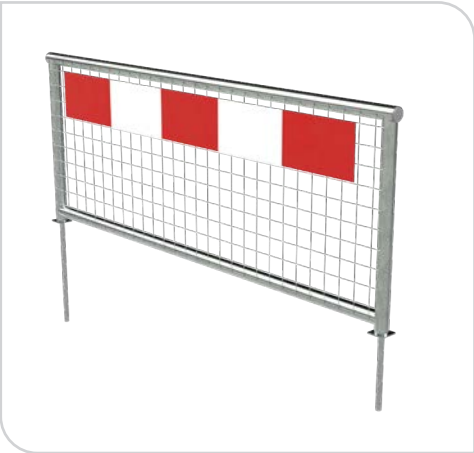

Additional Hi-Vis Chapter 8 Strip

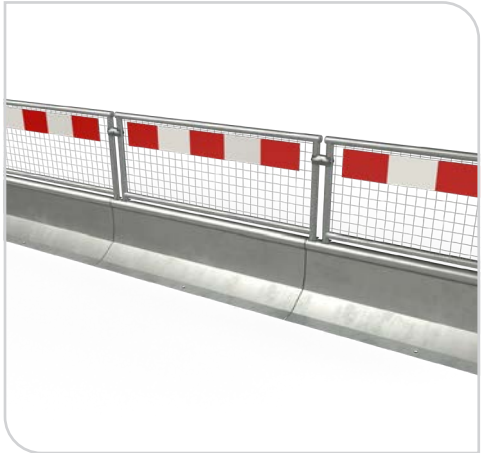

Row of Manta Barriers with Chapter 8 Pedestrian Fence

Key Features

- High visibility
- Legs double up as connection pins
- Anti-climb mesh
- Chapter 8 compliant
- Manufactured using galvanised steel
- Provides protection to workforce and pedestrians
- Compliant to requirements BSEN8442 & BSEN12899-1
- Increases overall height to 1m

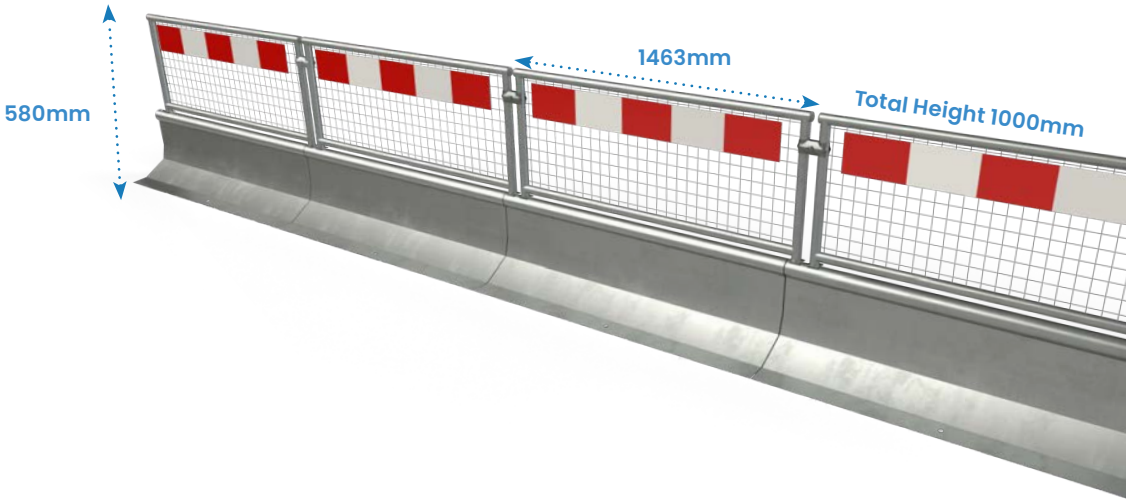

1.5m Chapter 8 Pedestrian Rail Specification

Description	**Size** (mm)	**Weight** (kg)
MTS200500 - 1.5m Chapter 8 Pedestrian Rail	H580 x W1463 x D38	6

Manta Barrier 3m Fence

In addition to its stand alone benefits, the Manta Barrier can accommodate one of the lightest 3m anti-climb fence panels on the market, allowing for greater ease when manually handling.

The add-on panel massively increases the overall height to a lofty 2m.

This quick and easy to install extension provides the reassurance of knowing the chances of a perimeter breach are dramatically reduced.

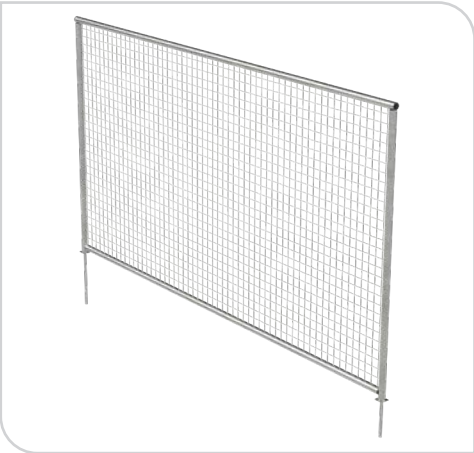

Made from galvanised steel

Row of Manta Barriers with 3m Fencing

3m Fence Specification

Description	**Size** (mm)	**Weight** (kg)
MTS200400 - 3m Fence	H1500 x W2968 x D38	15

Key Features

- Increases overall height to 2m
- Legs double up as connection pins
- Anti-climb mesh
- Quick and easy to install
- Manufactured using galvanised steel
- Provides protection to workforce and pedestrians
- Compliant to requirements BSEN8442 & BSEN12899-1
- Drastically Reduces the risk of the barrier perimeter being breached

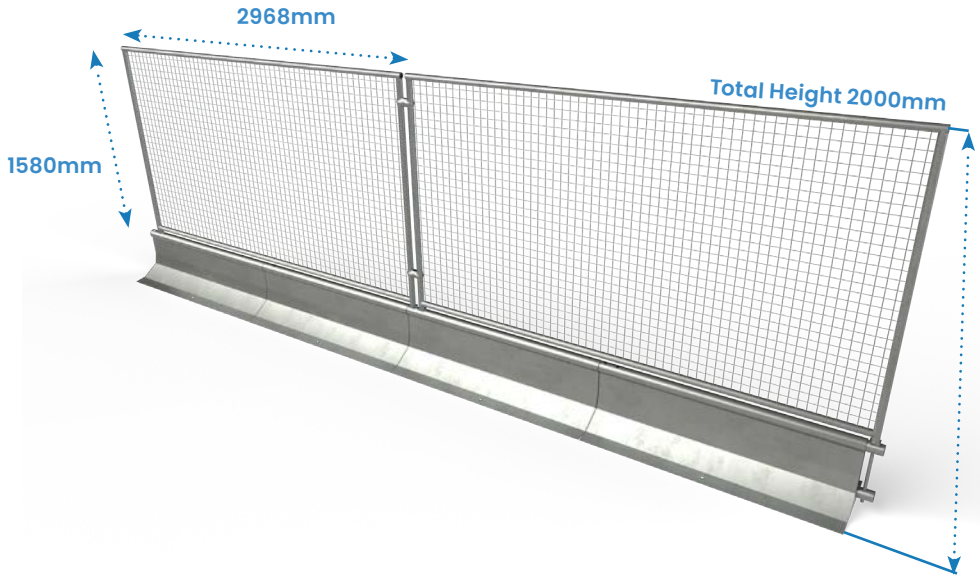

Manta Barrier 1.5m Fence Panel

Increase the security of your Manta Barrier System with the 1.5m Fence Panel. Designed to fit a single barrier, this galvanised anti-climb mesh panel is ideal for end sections, corners and temporary site security.

The Manta Barrier 1.5m Fence Panel has been designed to increase the security of individual sections within your Manta Barrier System, creating a secure 2m-high barrier where end sections, corners or shorter runs require additional protection.

Manufactured from galvanised steel anti-climb mesh, this lightweight panel provides an effective visual and physical deterrent while remaining easy to manually handle and quick to install on site.

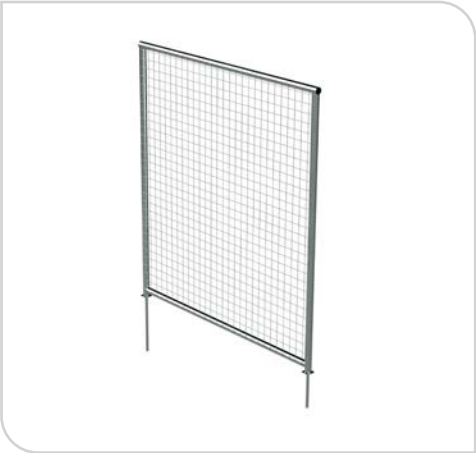

Made from galvanised steel

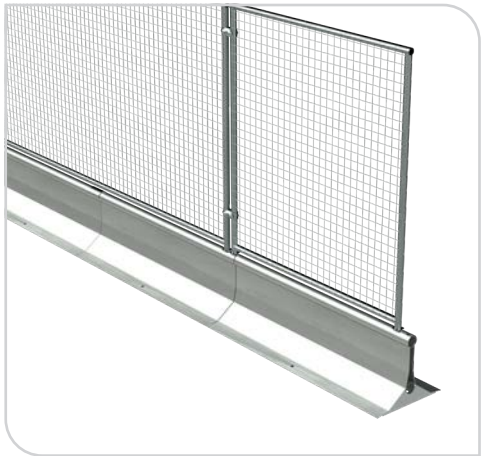

Row of Manta Barriers with 3m Fencing & 1.5m Fencing at the end

1.5m Fence Specification

Description	**Size** (mm)	**Weight** (kg)
MTS200410 - 1.5m Fence	H1580 x W1463 x D38	9

Key Features

- Increases overall height to 2m
- Legs double up as connection pins
- 2in Heavy duty mesh
- Quick and easy to install
- Provides protection to workforce and pedestrians
- Manufactured using galvanised steel
- Compatible with gates and corner systems

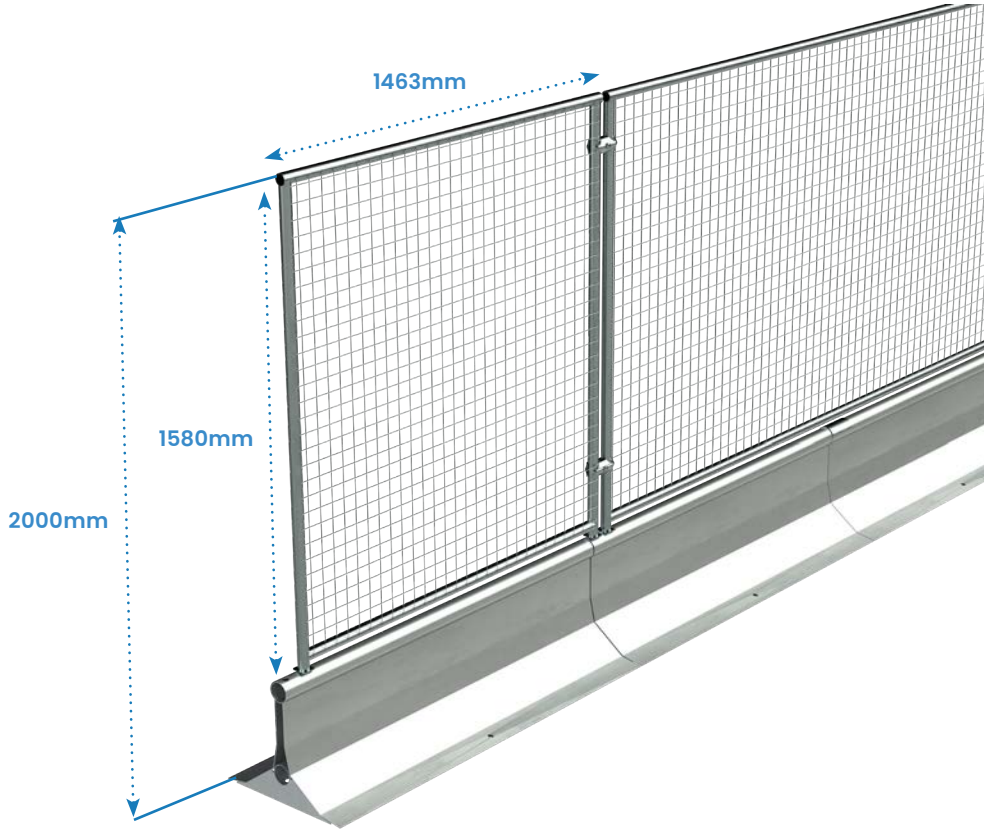

Manta Barrier Hoarding

Our hoarding come in to sizes 2m and 2.4m and can be install on any hard footing, making it ideal for roadworks and site perimeters.

It has a sturdy corrugated galvanised steel construction and bright powder coated colours to demark and obscure site boundary alongside offer the crash protection of the manta barrier. The hoarding utilises the same slot in installation as the rest of the manta's fencing option so installation is quick and easy.

2.4m Hoarding Panel

Row of Manta Barriers with Hoarding panels

Hoarding Fence Specification

Description	**Size** (mm)	**Weight** (kg)
MTS200020 - 2m Hoarding Panel	H1580 x W1463 x D38	19
MTS200050 - 2.4m Hoarding Panel	H1980 x W1463 x D38	23
MTS200080 - 2m Hoarding Infill Panel	H1450 x W140 x D1.2	3
MTS200090 - 2.4m Hoarding Infill Panel	H1850 x W140 x D1.2	3
MTS200095 - Hoarding Fence Stabiliser	H1905 x W130 x D38	2

Key Features

- Increases overall height to 2m or 2.4m
- Legs double up as connection pins
- Corrugated steel construction
- Quick and easy to install
- Provides protection and obscures sight lines
- Manufactured using galvanised steel
- Powder coated in hi-vis red and white or galvanised
- Drastically reduces the risk of the barrier perimeter being breached
- Requires to 3 couplers per panel to install
- Use ground chemical anchors of at least M12 x 110mm or suitable alternatives based on site conditions.

Manta Unpainted Barrier Corner Sections

Manta Barrier Corner Sections give the ability to rotate units at 90° to accommodate right angles and bends.

Common applications include defining pedestrian walkways and vehicle access, for example, to create a pit lane on a construction site or anywhere that requires the demarcation of vehicle traffic and footfall for pedestrian, visitor and workforce safety.

Manta Barrier 90° with fence

Manta Barrier Type 1 Unit Hi-Vis

Manta Unpainted Barrier Corners Specification

Description	**Size** (mm)	**Weight** (kg)
MTS200098 - Manta Unpainted Barrier Corner (Type 1)	H420 x W1570 x D500	43
MTS200108 - Manta Unpainted Barrier Corner (Type 2)	H420 x W1505 x D500	43
MTS200096 - Manta Unpainted Hi-Vis Barrier Corner (Type 1)	H420 x W1570 x D500	43
MTS200106 - Manta Unpainted Hi-Vis Barrier Corner (Type 2)	H420 x W1505 x D500	43
MTS180098 - Manta Lite Unpainted Barrier Corner (Type 1)	H420 x W1570 x D500	23
MTS180096 - Manta Lite Unpainted Hi-Vis Barrier Corner (Type 1)	H420 x W1570 x D500	23
MTS180108 - Manta Lite Unpainted Barrier Corner (Type 2)	H420 x W1505 x D500	25
MTS180106 - Manta Lite Unpainted Hi-Vis Barrier Corner (Type 2)	H420 x W1505 x D500	25

Key Features

- Easy connection brackets
- 45° angled body to allow for 90° angle when joined
- Fence add-ons can still be used with angled sections
- Perfect for forming pedestrian walkways and construction site access areas
- Identification markers for easy install

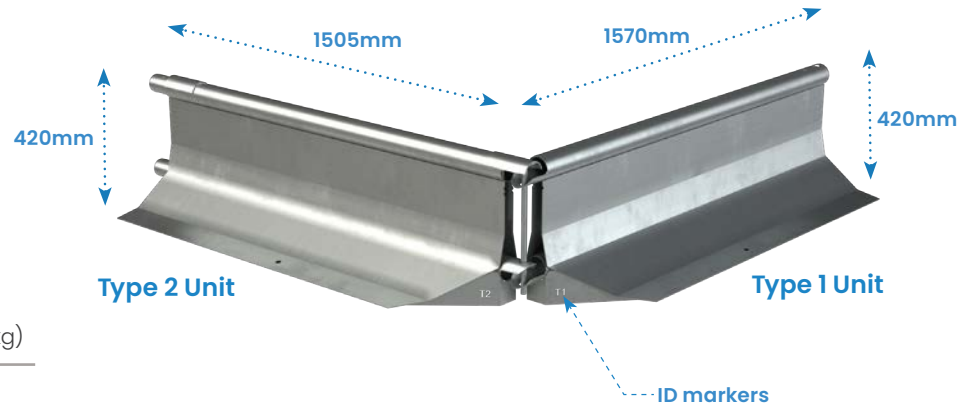

Manta Barrier is Adaptable for Curved Site Environments

Manta Barrier is adaptable for curved site environments, making it suitable for projects where alignment flexibility is essential.

The standard barrier system can accommodate gradual curves with a maximum achievable curve radius of 40.55m without the need for custom components or modifications.

The diagram below, highlights 16 of manta barriers being used to achieve this curve and bend.

Example of Manta Unpainted Barriers installed with a curve

Example of Manta Unpainted Barriers installed with a curve

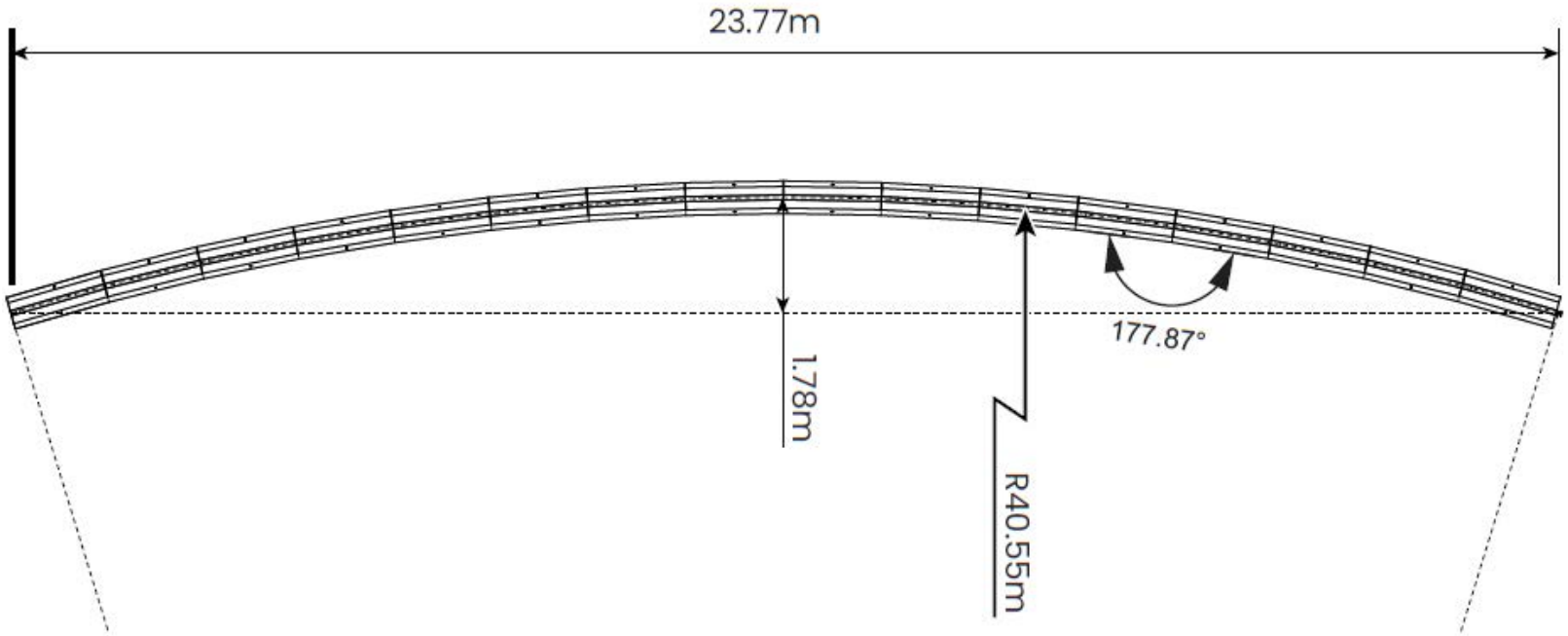

Manta Unpainted Barrier End Sections

A run of Manta Barriers can be neatly finished off by using our specially designed end section unit, the finishing section is available for both male and female connections and ensures there are no unwanted edges that could potentially be hazardous.

The end section maintains the height of the standard unit and has the advantage of also being compatible with all of the available fencing add-ons. Other benefits include the end sections ability to act as a cushion absorbing impact and in turn protecting connection parts should the Manta barrier be impacted.

In addition the end section allows for a nice tidy finish to the end of a Manta Barrier run, it also has benefits due to its octagonal shape which minimises movement when in transit if stacked on its side, compared to round competitor units which are prone to excessive movement when in transit.

Male End Section

Female End Section

Manta Unpainted Barrier End Sections Specification

Description	**Size** (mm)	**Weight** (kg)
MTS200128 - Male Unpainted	H500 x W660 x D490	17
MTS200188 - Female Unpainted	H500 x W580 x D490	19

Manta Barrier Low Pedestrian Gate and Fencing

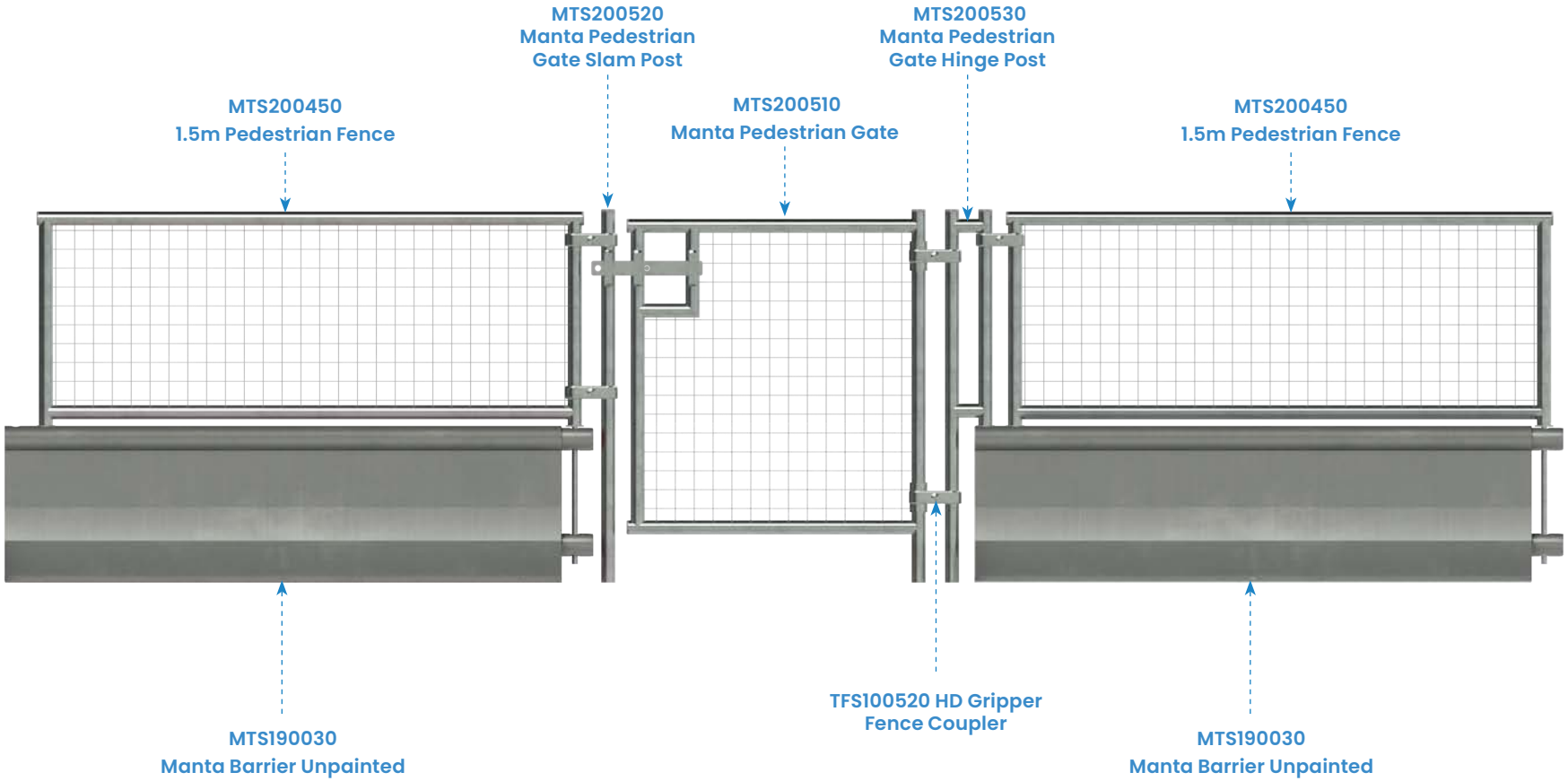

Manta Barrier Pedestrian Gate and Fencing

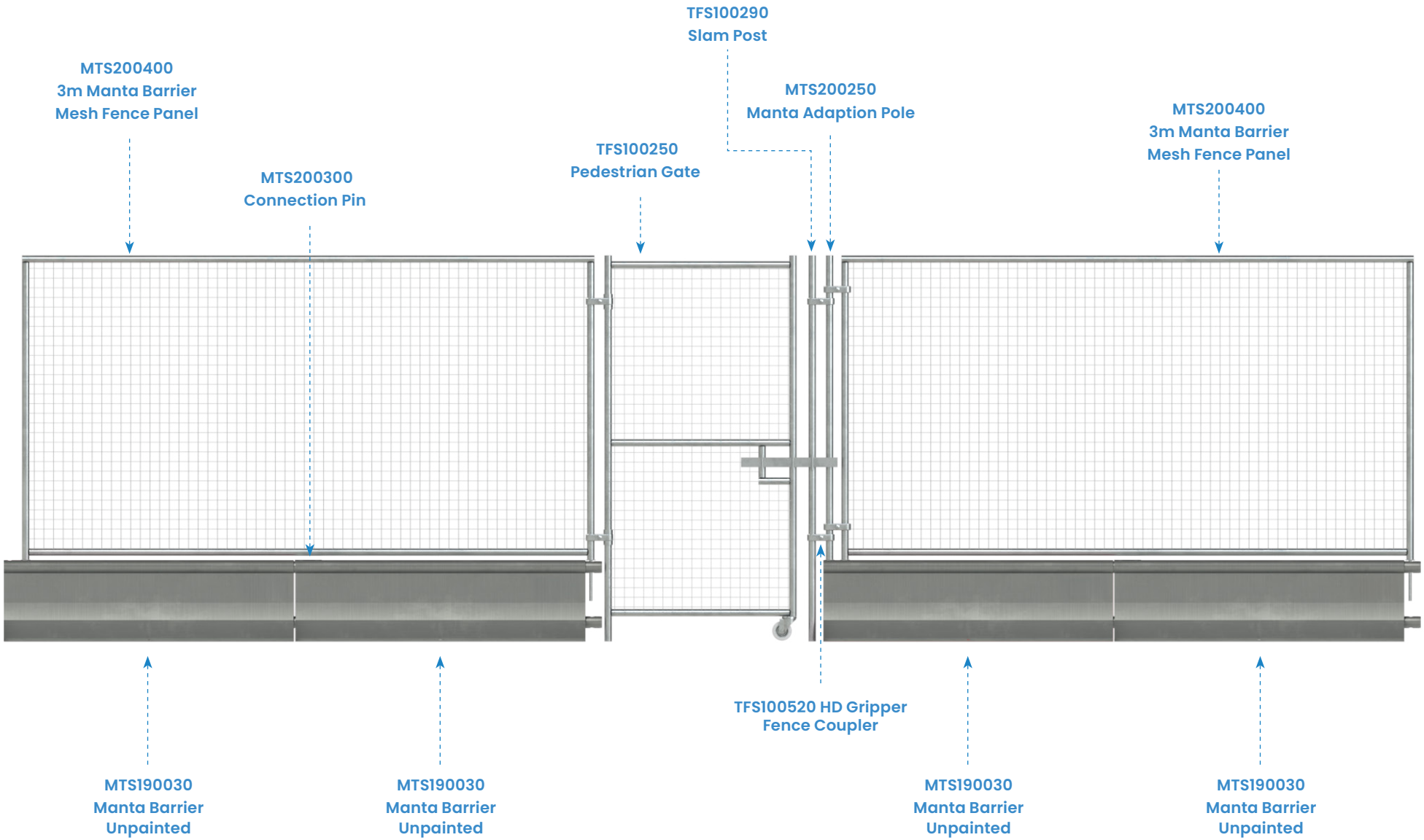

Manta Barrier Vehicle Gate and Fencing

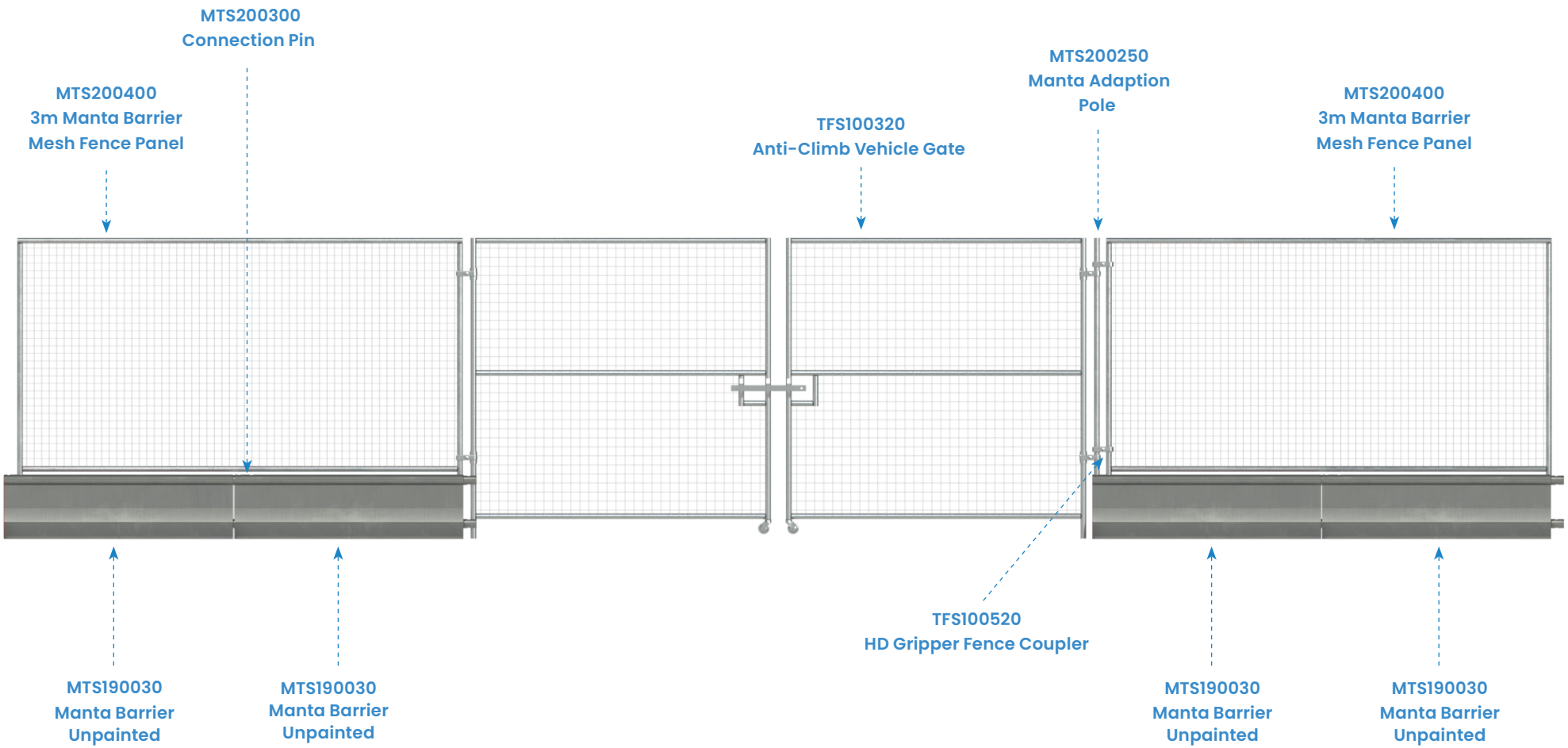

Installation parts

Manta Barrier - Measurements in mm

Please see below pictures of additional parts and optional accessories you can use with Manta Barrier.

Standard part

1 Connection pin
MTS200300

Size (mm)	Weight (kg)
H380 x W140 x D72	1.2

Accessory part

2 Manta Lifting Bar
MAS190640

Size (mm)	Weight (kg)
H161 W600 x D16	-

Accessory part

3 1.5m Pedestrian Fences
MTS200450 & MTS200500

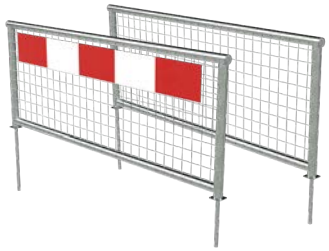

Size (mm)	Weight (kg)
H580 x W1463 x D389	6

Accessory part

4 3m & 1.5m Fence
MTS200400 & MTS200410

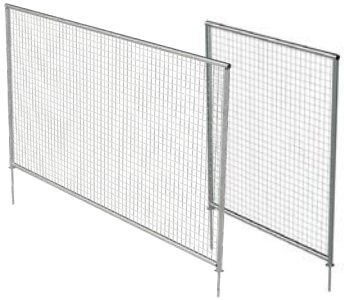

Size (mm)	Weight (kg)
H1580 x W2968 x D38	0.74

Accessory part

5 2m/2.4m Hoarding Panel
MTS200020 MTS200030/MTS200040
MTS200050/MTS200060/MTS200070

Size (mm)	Weight (kg)
H1450/1870 x W1463 x D38	19/23

Accessory part

6 Standard Fence Coupler
TFS100500

Size (mm)	Weight (kg)
H50 W130 x D52	0.2

Accessory part

7 2m/2.4m Hoarding Infill Panel
MTS200080/MTS200090

Size (mm)	Weight (kg)
H1450/1850 W140 x D1.2	3

Accessory part

8 Manta Hoarding Stabiliser
MTS200095

Size (mm)	Weight (kg)
H1905 x W130 x D38	2

Accessory part

9 Chemical Anchor for Hoarding

Size (mm)	**Weight** (kg)
H100 x W12	0.1

Accessory part

10 Manta Barrier End Section
MTS200180/MTS200185/
MTS200190/MTS200195

Size (mm)	Weight (kg)
H500 x W660/580 x D490	17/19

1

Please be aware the Manta Barriers measure 1.5m in length and will therefore slightly overhang the 1.2m pallet they are to be placed onto, this overhang is acceptable within these guidelines.

Place two Manta Barriers side by side so the inner edge of each foot touches the opposing barrier. Each barrier should align at both ends.

When together the barriers should take a central placement on top of the pallet.

2

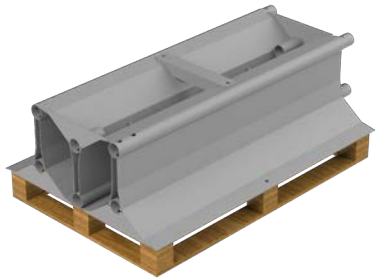

Insert one Manta Barrier upside down to fit inside the empty void that was created from the placement of the previous two barriers.

The feet of this barrier should be evenly supported by the heads of the previous two barriers and also align with the ends of the previous two barriers.

The exposed base of this barrier must be even and level in readiness for the next processes.

3

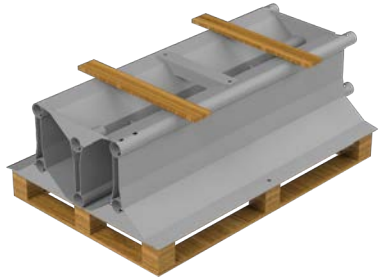

Two additional lengths of pallet wood must now be placed onto the flat base of the previously positioned barrier.

These lengths of wood should be placed approximately 15cm within each end of the three stacked barriers, and be placed in such a way the centre of the wood is central to the base of the third barrier and parallel to the pallet beneath.

4

Carefully place a further two Manta Barriers side by side onto thepreviously placed pallet wood so that the inner edge of each foottouches the opposing barrier, each barrier should align top andside with the stacked barriers below.

When together both the barriers should take a central placement in relation to the bottom barriers and pallet.

5

Now one last barrier must be carefully placed on top of the last two barriers to fit inside the empty void that was created.

The feet of this barrier should be evenly supported by the heads of the previous two barriers, and also align with the ends of the previous two barriers.

The exposed base of this barrier must be even and level in readiness for the next processes.

6

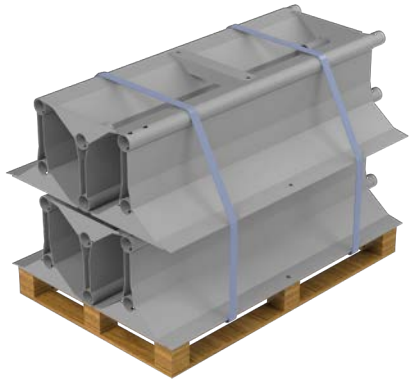

Now a check must be carried out to ensure all of the stacked barriers are evenly balanced, stable and level.

Once this check is successfully completed the whole stack must be secured by heavy duty polypropylene pallet strapping to run from the underside of the pallets top level, all the way around the six stacked barriers. Two rings of strapping must be applied approximately one quarter distance from each end of the stacked barriers.